Dimensions of Caps

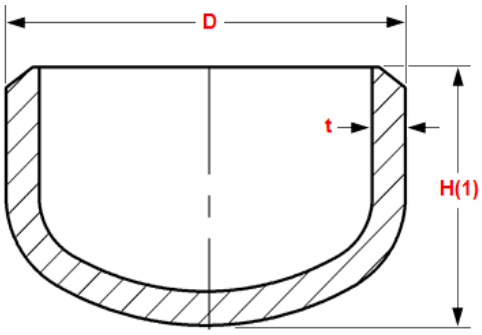

NPS	OD, D	Length, H	Limiting Wall Thickness for Length, H	Length, H1
1/2	21.3	25	4.57	25
3/4	26.7	25	3.81	25
1	33.4	38	4.57	38
1 1/4	42.2	38	4.83	38
1 1/2	48.3	38	5.08	38
2	60.3	38	5.59	44
2 1/2	73	38	7.11	51
3	88.9	51	7.62	64
3 1/2	101.6	64	8.13	76
4	114.3	64	8.64	76
5	141.3	76	9.65	89
6	168.3	89	10.92	102
8	219.1	102	12.7	127
10	273	127	12.7	152
12	323.8	152	12.7	178
14	355.6	165	12.7	191
16	406.4	178	12.7	203
18	457	203	12.7	229
20	508	229	12.7	254
22	559	254	12.7	254
24	610	267	12.7	305
26	660	267	...	...
28	711	267	...	...
30	762	267	...	...
32	813	267	...	...
34	864	267	...	...
36	914	267	...	...
38	965	305	...	...
40	1016	305	...	...
42	1067	305	...	...
44	1118	343	...	...
46	1168	343	...	...
48	1219	343	...	...

(1) Length H appllies for thickness not exceeding that given in column "Limiting Wall Thickness for Length H."

(2)Length H1 applies for thickness greater than that given in column "Limiting Wall Thickness" for NPS 24 and smaller. For NPS 26 and larger,length H1 shall be by agreement between the manufacturer and purchaser.